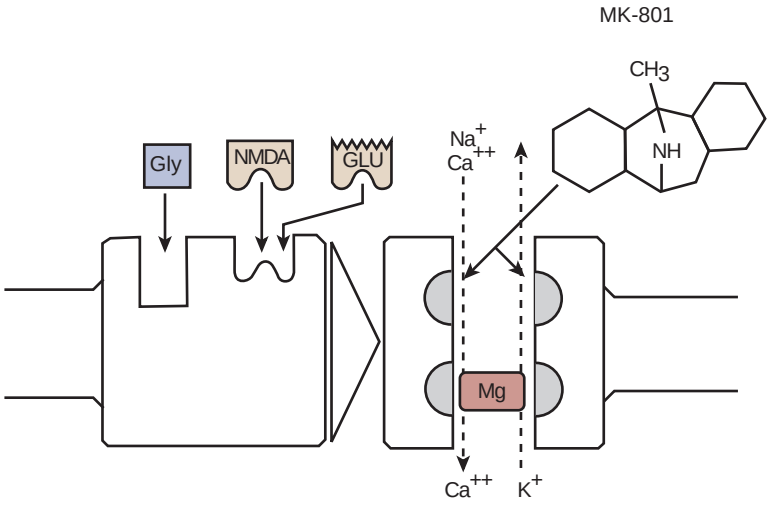
MK-801
CH3
NH
Gly
NMDA
GLU
Na+
Ca++
Mg
Ca++
K+